Chapter 1: Introduction

- What is an Operating System?
- Computer-System Organization
- Computer-System Architecture
- Operating-System Structure
- Operating-System Operations
- Computing Environments

What is an Operating System?

- A program that acts as an intermediary between a user of a computer and the computer hardware.
- Operating system goals:
  - Execute user programs and make solving user problems easier
  - Make the computer system convenient to use
  - Use the computer hardware in an efficient manner

Computer System Structure

- Computer system can be divided into four components:
  - Hardware – provides basic computing resources
    - CPU, memory, I/O devices
  - Operating system
    - Controls and coordinates use of hardware among various applications and users
  - Application programs – define the ways in which the system resources are used to solve the computing problems of the users
    - Word processors, compilers, web browsers, database systems, video games
  - Users
    - People, machines, other computers

Four Components of a Computer System

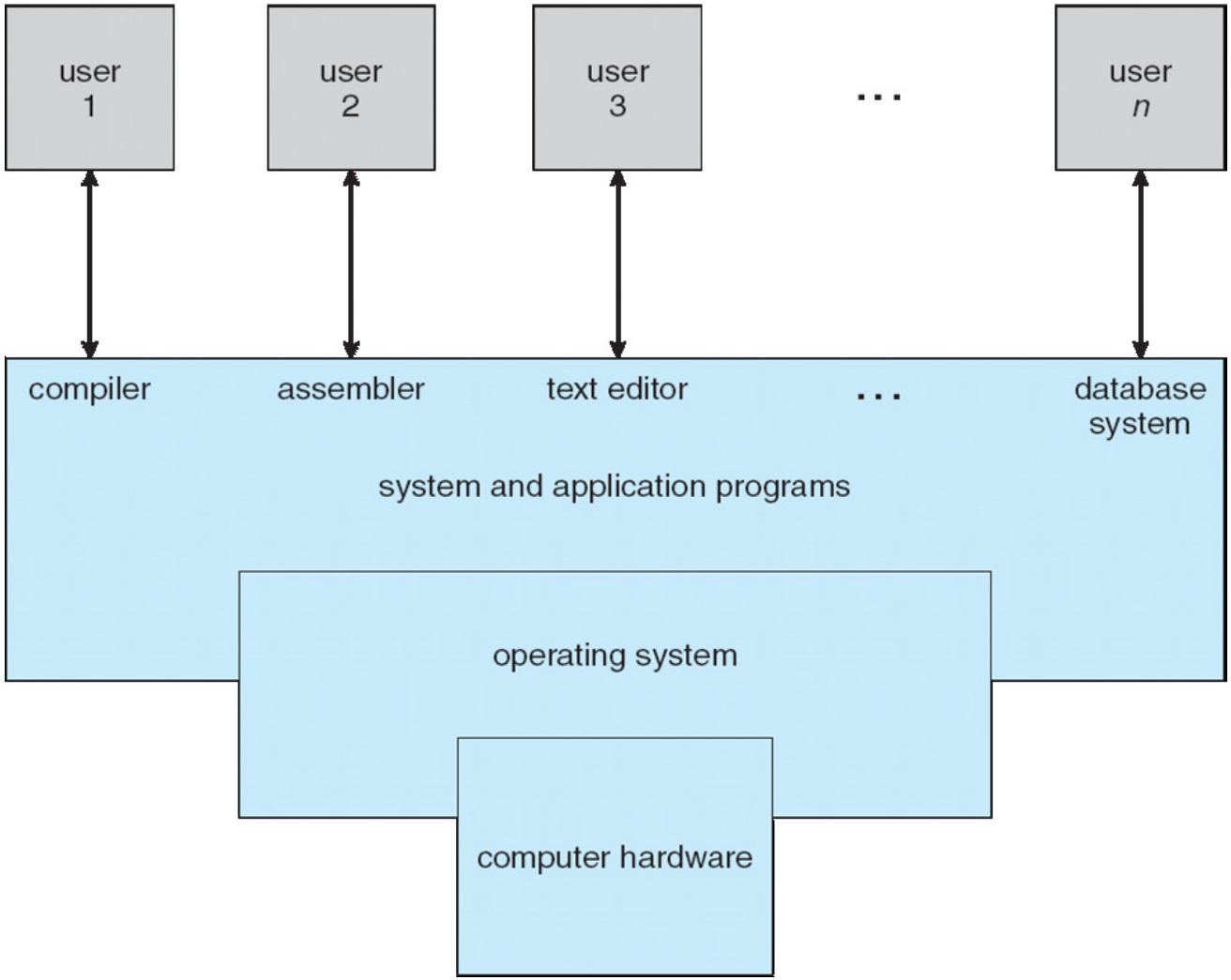

What Operating Systems Do

- The operating system controls the hardware and coordinates its use among the various application programs for the various users.
- We can also view a computer system as consisting of hardware, software, and data.
- The operating system provides the means for proper use of these resources in the operation of the computer system.
- It simply provides an **environment** within which other programs can do useful work.
- To understand more fully the operating system's role, we explore operating systems from two viewpoints:
  - The user
  - The system.

User View

The user's view of the computer varies according to the interface being used:

- **Single user computers** (e.g., PC, workstations). Such systems are designed for one user to monopolize its resources. The goal is to maximize the work (or play) that the user is performing. the operating system is designed mostly for **ease of use** and **good performance.**
- **Multi user computers** (e.g., mainframes, computing servers). These users share resources and may exchange information. The operating system in such cases is designed to maximize resource utilization -- to assure that all available CPU time, memory, and I/O are used efficiently and that no individual users takes more than their air share.
- **Handheld computers** (e.g., smartphones and tablets). The user interface for mobile computers generally features a **touch screen.** The systems are resource poor, optimized for usability and battery life.
- **Embedded computers** (e.g., computers in home devices and automobiles) The user interface may have numeric keypads and may turn indicator lights on or off to show status. The operating systems are designed primarily to run without user intervention.

System View

From the computer's point of view, the operating system is the program most intimately involved with the hardware. There are two different views:

- The operating system is a **resource allocator**
  - Manages all resources
  - Decides between conflicting requests for efficient and fair resource use
- The operating systems is a **control program**
  - Controls execution of programs to prevent errors and improper use of the computer

Defining Operating System

- Operating systems exist to offer a reasonable way to solve the problem of creating a usable computing system.
- The fundamental goal of computer systems is to execute user programs and to make solving user problems easier.
- Since bare hardware alone is not particularly easy to use, application programs are developed.
  - These programs require certain common operations, such as those controlling the I/O devices.
  - The common functions of controlling and allocating resources are brought together into one piece of software: the **operating system**.
- A simple viewpoint is that it includes everything a vendor ships when you order the operating system. The features that are included vary greatly across systems:
  - Some systems take up less than a megabyte of space and lack even a full-screen editor,
  - Some systems require gigabytes of space and are based entirely on graphical windowing systems.

Defining Operating System (Cont.)

- A more common definition, and the one that we usually follow, is that the operating system is the one program running at all times on the computer -- usually called the **kernel**.
- Along with the kernel, there are two other types of programs:
  - System programs, which are associated with the operating system but are not necessarily part of the kernel.
  - Application programs, which include all programs not associated with the operation of the system.
- The emergence of mobile devices, have resulted in an increase in the number of features that constituting the operating system.
  - Mobile operating systems often include not only a core kernel but also **middleware** -- a set of software frameworks that provide additional services to application developers.

Computer-System Organization

- A modern general-purpose computer system consists of one or more CPUs and a number of device controllers connected through a common bus that provides access to shared memory.
- Each device controller is in charge of a specific type of device (for example, disk drives, audio devices, or video displays). Each device controller has a local buffer.
- CPU moves data from/to main memory to/from local buffers.
- The CPU and the device controllers can execute in parallel, competing for memory cycles. To ensure orderly access to the shared memory, a memory controller synchronizes access to the memory.

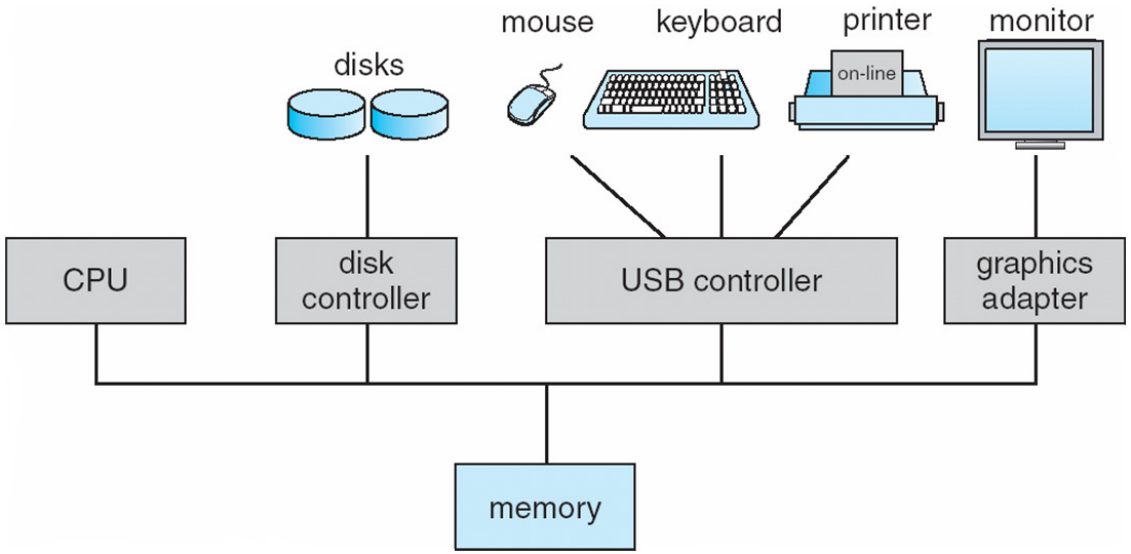

Computer Startup

- **Bootstrap program** is loaded at power-up
  - Typically stored in ROM or EPROM
  - Initializes all aspects of system
  - Loads MBR (Master Boot Record)
  - Loads operating system kernel and starts execution

- **Computer-System Operation:**
  - Once the kernel is loaded and executing, it can start providing services to the system and its users.
  - The occurrence of an event is usually signaled by an **interrupt.**

Interrupts

- There are two types of interrupts:
  - **Hardware** -- a device may trigger an interrupt by sending a signal to the CPU, usually by way of the system bus.
  - **Software** -- a program may trigger an interrupt by executing a special operation called a **system call.**
- A software-generated interrupt (sometimes called **trap** or **exception**) is caused either by an error (e.g., divide by zero) or a user request (e.g., an I/O request).
- An operating system is **interrupt driven.**

Common Functions of Interrupts

- When an interrupt occurs, the operating system preserves the state of the CPU by storing the registers and the program counter.
- Determines which type of interrupt has occurred and transfers control to the interrupt-service routine.
- An interrupt-service routine is a collection of routines (modules), each of which is responsible for handling one particular interrupt (e.g., from a printer, from a disk)
- The transfer is generally through the **interrupt vector**, which contains the addresses of all the service routines.
- Interrupt architecture must save the address of the interrupted instruction.

Storage Hierarchy

- Storage systems organized in hierarchy
  - Speed
  - Cost
  - Volatility

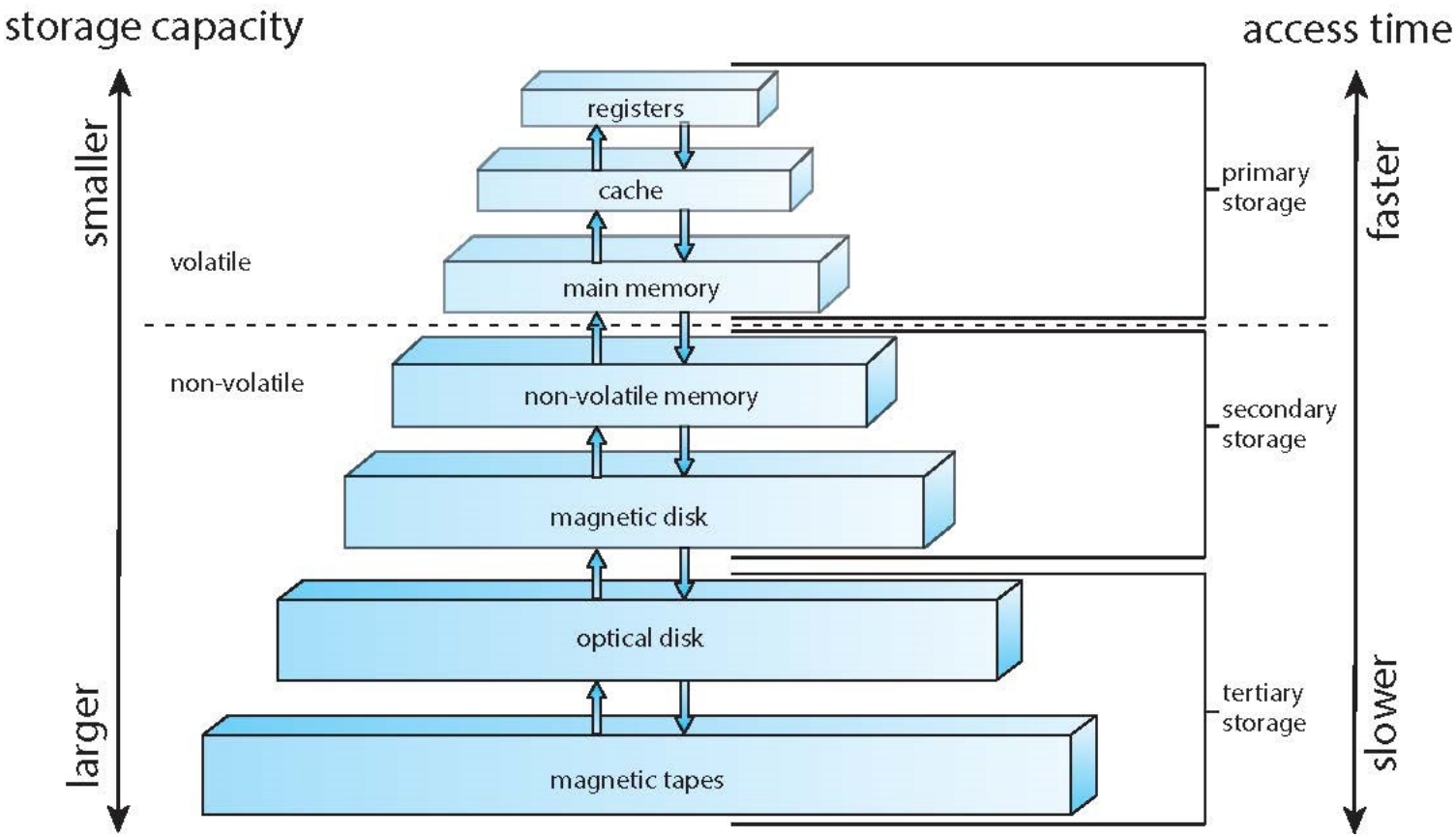

I/O Structure

- A general-purpose computer system consists of CPUs and multiple device controllers that are connected through a common bus.
- Each device controller is in charge of a specific type of device. More than one device may be attached.
  - A device controller maintains some local buffer storage and a set of special-purpose registers.
  - The device controller is responsible for moving the data between the peripheral devices that it controls and its local buffer storage.
- Typically, operating systems have a **device driver** for each device controller. This device driver understands the device controller and provides the rest of the operating system with a uniform interface to the device.

I/O Structure (Cont.)

- To start an I/O operation, the device driver loads the appropriate registers within the device controller.
- The device controller, in turn, examines the contents of these registers to determine what action to take (such as "read" a character from the keyboard).
- The controller starts the transfer of data from the device to its local buffer. Once the transfer of data is complete, the device controller informs the device driver via an interrupt that it has finished its operation.
- The device driver then returns control to the operating system, possibly returning the data or a pointer to the data if the operation was a read.
- For other operations, the device driver returns status information.

Direct Memory Access

- Interrupt-driven I/O is fine for moving small amounts of data but can produce high overhead when used for bulk data movement such as disk I/O.
- To solve this problem, **direct memory access** (DMA) is used.
  - After setting up buffers, pointers, and counters for the I/O device, the device controller transfers an entire block of data directly to or from its own buffer storage to memory, with no intervention by the CPU.
  - Only one interrupt is generated per block, to tell the device driver that the operation has completed. While the device controllers perform these operations, the CPU is available to accomplish other work.

How a Modern Computer Works

A von Neumann architecture and a depiction of the interplay of all components of a computer system.

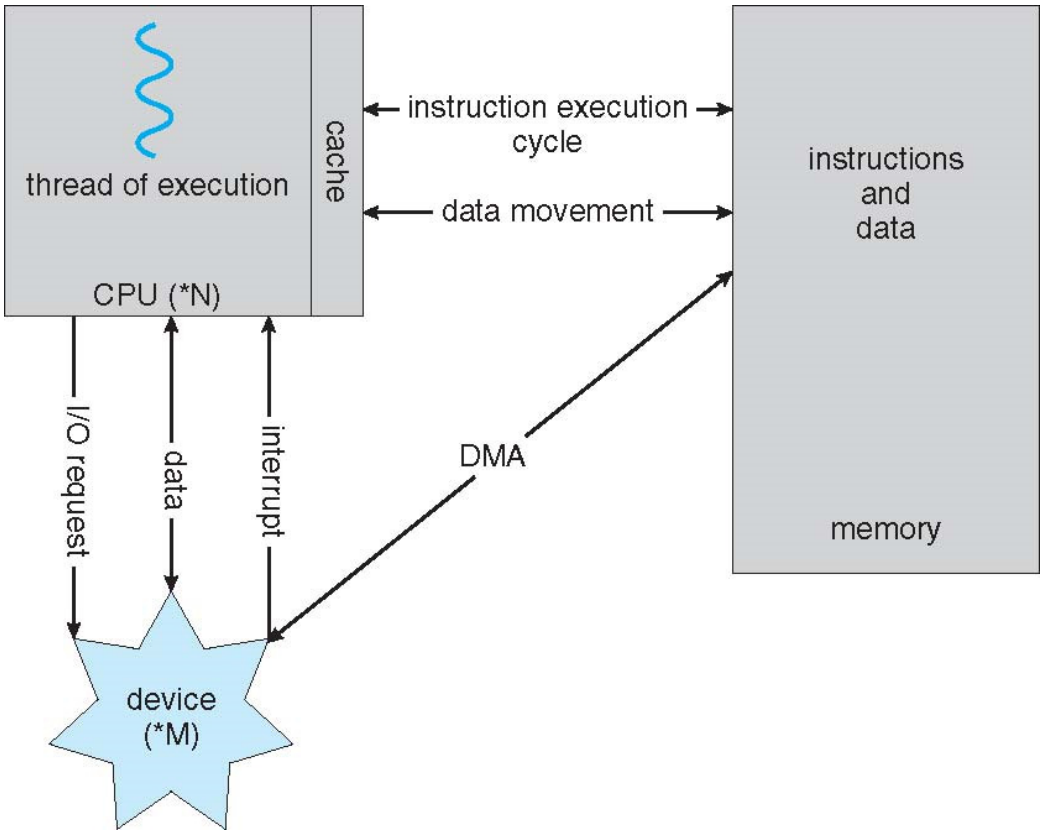

Computer-System Architecture

- **Single general-purpose processor**
  - Most systems have special-purpose processors as well
- **Multiprocessors** systems growing in use and importance
  - Also known as **parallel systems**, **tightly-coupled systems**
  - Advantages include:
    - **Increased throughput**
    - **Economy of scale**
    - **Increased reliability** – graceful-degradation/fault-tolerance
  - Two types:
    - **Symmetric Multiprocessing** – each processor performs all tasks
    - **Asymmetric Multiprocessing** – each processor is assigned a specific task.
  - Most CPU design now includes multiple computing cores on a single chip. Such multiprocessor systems are termed **multicore**.
  - ***Note -- while multicore systems are multiprocessor systems, not all multiprocessor systems are multicore.***

Operating System Structure

Multiprogrammed System

- Single user cannot keep CPU and I/O devices busy at all times
- **Multiprogramming** organizes jobs (code and data) so CPU always has one to execute
- A subset of total jobs in system is kept in memory
- Batch systems:
  - One job selected and run via **job scheduling**
  - When it has to wait (for I/O for example), OS switches to another job

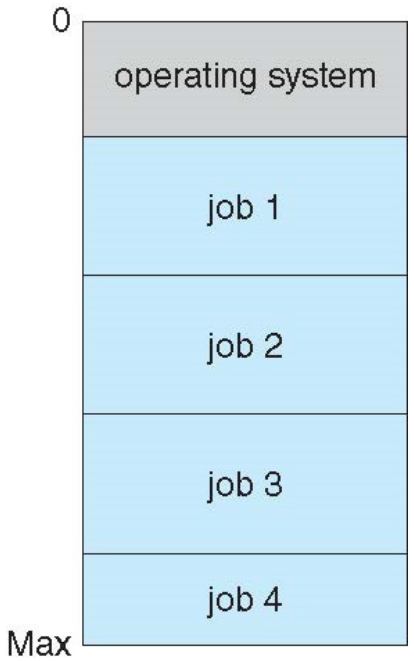

Memory Layout for Multiprogrammed System

Timesharing Systems

- Timesharing systems:
  - Logical extension of batch systems -- CPU switches jobs so frequently that users can interact with each job while it is running, creating **interactive** computing
- Timesharing is also referred to as **multitasking.**
- **Response time** should be < 1 second
- Each user has at least one program executing in memory. Such a program is referred to as a **process**
- If several processes are ready to run at the same time, we need to have **CPU scheduling.**
- If processes do not fit in memory, **swapping** moves them in and out to run
- **Virtual memory** allows execution of processes not completely in memory

Operating System Operation

Modes of Operation

- **Interrupt driven** (hardware and software)
  - Hardware interrupt by one of the devices
  - Software interrupt (**exception** or **trap):**
    - Software error (e.g., division by zero)
    - Request for operating system service
- **Dual-mode** operation allows OS to protect itself and other system components
  - **User mode** and **kernel mode**
  - **Mode bit (0 or 1)** provided by hardware
    - Provides ability to distinguish when system is running user code or kernel code
    - Some instructions designated as **privileged**, only executable in kernel mode
    - System call changes mode to kernel, return from call resets it to user
- Increasingly CPUs support multi-mode operations:
  - i.e. **virtual machine manager** (**VMM**) mode for guest **VMs**

Transition from User to Kernel Mode

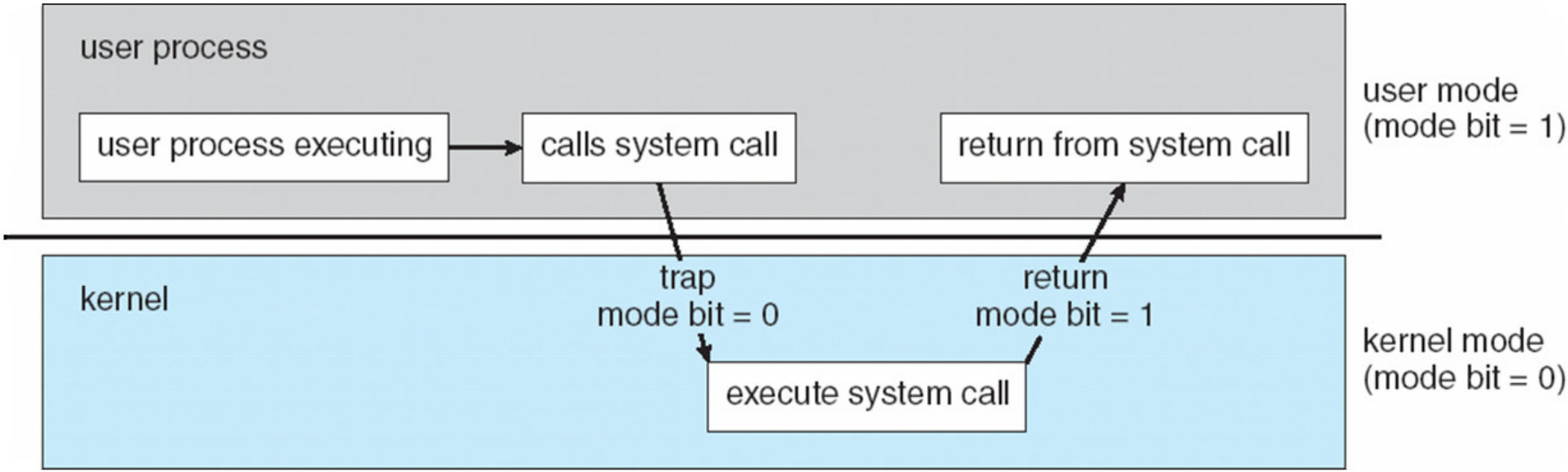

Timer

To prevent process to be in infinite loop (process hogging resources), a **timer** is used, which is a hardware device:

- Timer is a counter that is decremented by the physical clock.
- Timer is set to interrupt the computer after some time period
- Operating system sets the counter (privileged instruction)
- When counter reaches the value zero, and interrupt is generated.
- The OS sets up the value of the counter before scheduling a process to regain control or terminate program that exceeds allotted time

Computing Environments

- Traditional
- Mobile
- Distributed
- Client-Server
- Peer to peer
- Virtualization
- Cloud Computing
- Real time embedded systems

Reference

- "Operating System Concepts", Silberschatz, Galvin, Gagne, 9th Edition, Wiley India.